INFORMATION SHEET 10/11/16 TRUSTEES' MEETING

ATTACHMENT: 4.6

TO: Jim Bridges

FOR: Board of Trustees

FR: Mindy Maxedon

ISSUE: Precisions Wall Finishes – Jefferson School Fire Pump Shelter

The pump that runs the fire suppression system at Jefferson requires a protective housing to guard against extreme temperature swings. The district purchased a pre-manufactured shelter to fit over the pump unit.

Precision Wall Finishes will construct a concrete apron to extend the existing slab and install the pre-manufactured shelter over the pump.

The project will be paid from the Jefferson Modernization project funds in Fund 21.

PROPOSAL

P.W.F.

Precision Wall Finishes

Gary J. McAndrews
gjmlp@sbcglobal.net
Gary W. McAndrews
gmcandrews6@sbcglobal.net

PO Box 1005
Salida, CA 95368
Lic #927917

Phone: 209-522-3040
Fax: 209-522-3050
Cell: 209-606-4511

Proposal Submitted To: Sam Hagler	Phone: (209) 834-6109	
Street: 1219 Whispering Wind Drive	Job Name: Jefferson School Fire Pump Cont. Shelter	
City: Tracy State: CA Zip Code: 95377	Job Location: Tracy, CA	
Attention: Sam	Date of Plans :	Date: 9-12-2016

We hereby submit specification and estimates for the following:

To place a concrete apron as per plans doweled into existing slab to extend the existing slab by (' as per the plans received.

We will then lift the pre-manufactured shelter into position and red-head it down as per the plans and make the electrical connections as shown on the plans.

We will provide normal job-site clean-up each day and off-haul our debris from the job-site.

This job is figured at pre-vailing wage rates

Our DIR # is: 1000014699

We propose hereby to furnish material and labor— complete in accordance with the above specifications, for the sum of:
($7,240.00) Seven Thousand Two Hundred and Forty Dollars and no/100
Payments to be made as follows: 100% Payment upon completion
All labor and material is guaranteed to be as specified. All work to be completed in a workmanlike manner according to standard practices. Any alteration or deviation from above specifications involving costs will be executed only upon written orders, and will become an extra charge over and above the estimate. All agreements contingent upon strikes, accidents or delays beyond our control. Owner to carry fire, tornado and other necessary insurance. Our workers are fully covered under Workmen's Compensation Insurance. Smooth finishes are subject to excessive cracking and discoloration, which is beyond our control. No warranty to be honored with smooth finish stucco.
Authorized Signature: _____ Date: (9-12-2016)
Note: this proposal may be withdrawn by us if not accepted within (30) days.

Acceptance of proposal — The above prices, specifications, and conditions are satisfactory and are hereby accepted. You are authorized to do the work as specified. Payment will be made as outlined above:
Date: 9/20/16 Signature: _____ Signature: _____

KEYNOTES:

1 EXISTING CONC. EQUIPMENT PAD
2 EXISTING PIPING TO BE PROTECTED DURING SHELTER INSTALLATION.
3 NEW PRE.MANUFACTURED SHELTER, SEE ELECTRICAL DRAWING FOR ELEC. POINTS OF CONNECTION. VERIFY NEW CONDUIT ROUTING W/ ARCHITECT PRIOR TO INSTALLATION. IT IS INTEND TO ENTER SHELTER THROUGH THE "KNOCK OUT PANEL", ITEM LIST NO. 10 OF THE APPROVED SHELTER SHOP DRAWINGS, BY "SHELTER WORK"
4 EXISTING FIRE PUMP CONTROL PANEL
5 EXISTING JOCKEY PUMP CONTROL PANEL
6 EXISTING CONC. EQUIPMENT PAD
7 EXISTING GENERATOR
8 NEW CONCRETE SLAB EXTENSION

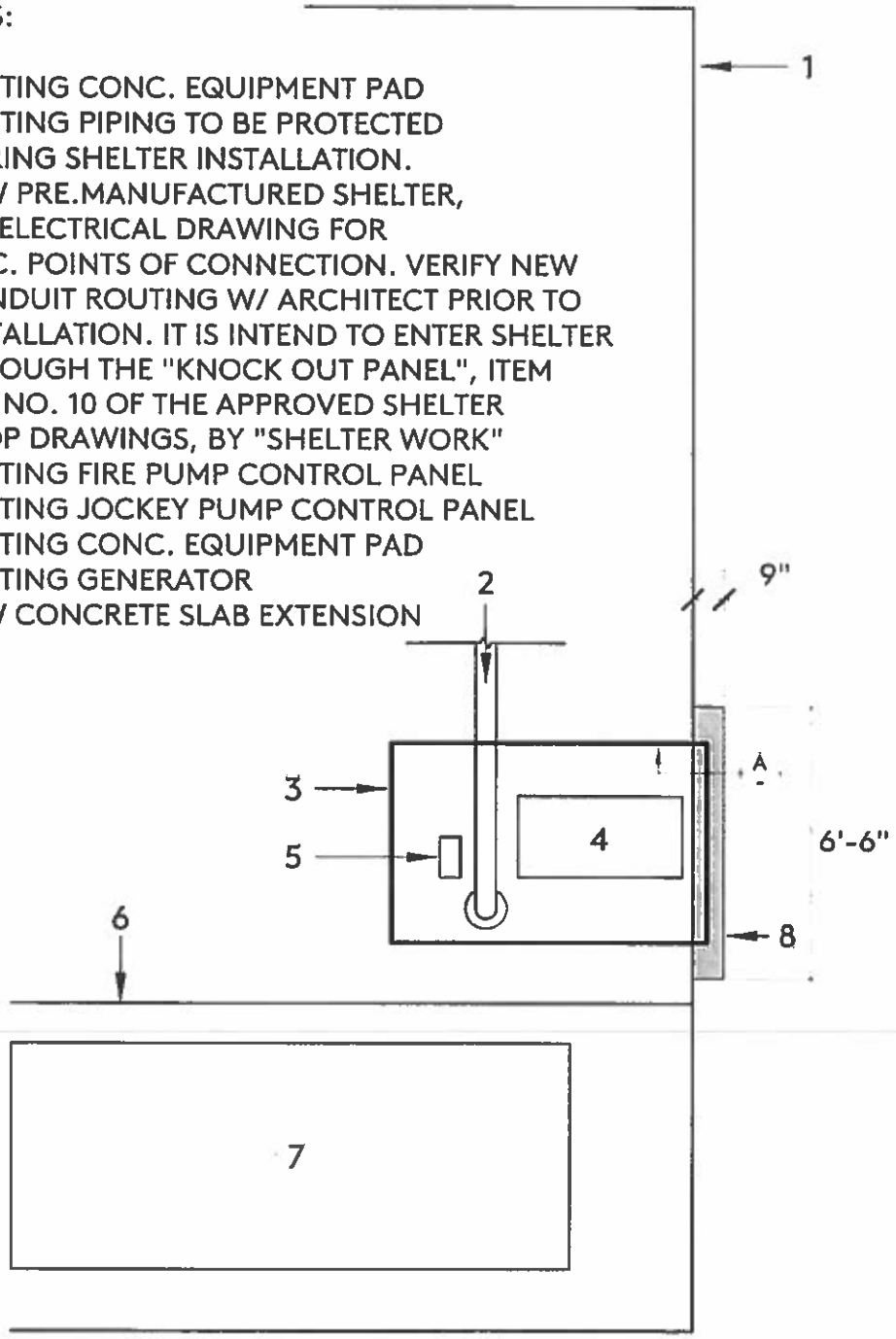

n-

pjhm architects

San Diego:
604 Pier View Way #103
Oceanside, CA 92054
p 760 730 8527 f 760 730 8627

Orange County:
24481 Ridge Route Road #100
Laguna Hills, CA 92653
p 949 498 6181 f 949 498 0209

JEFFERSON SCHOOL REPLACEMENT
INCREMENT 2 EQUIPMENT SHELTER
PHASE II
JEFFERSON SCHOOL DISTRICT

All	DATE	SCALE
	06/21/16	1'1/2 " = 1'

DESCRIPTION: PARTIAL SITE PLAN

SHEET: CONCRETE DETAIL

EXISTING CONC. EQUIPMENT PAD

PRE. MANUFACTURED SHELTER ATTACH TO SLAB W/ EXPANSION ANCHORS AT PRE.DETERMINED LOCATIONS, 2 $\frac{3}{4}$ " MIN. EMBED.

CONTINUOUS NO.3 BAR

NO. 3 BARS @ 24" O.C. & 6" IN FROM ENDS. DRILL END OF EXISTING EQUIPMENT PAD AS REQ'D TO RECEIVE NO.3 BARS, $\frac{5}{8}$ " DIA x 3". SET BARS TO NON-SHRINK ADHESIVE.

NEW 4"TH. 2500 PSI CONC. SLAB EXTENSION.

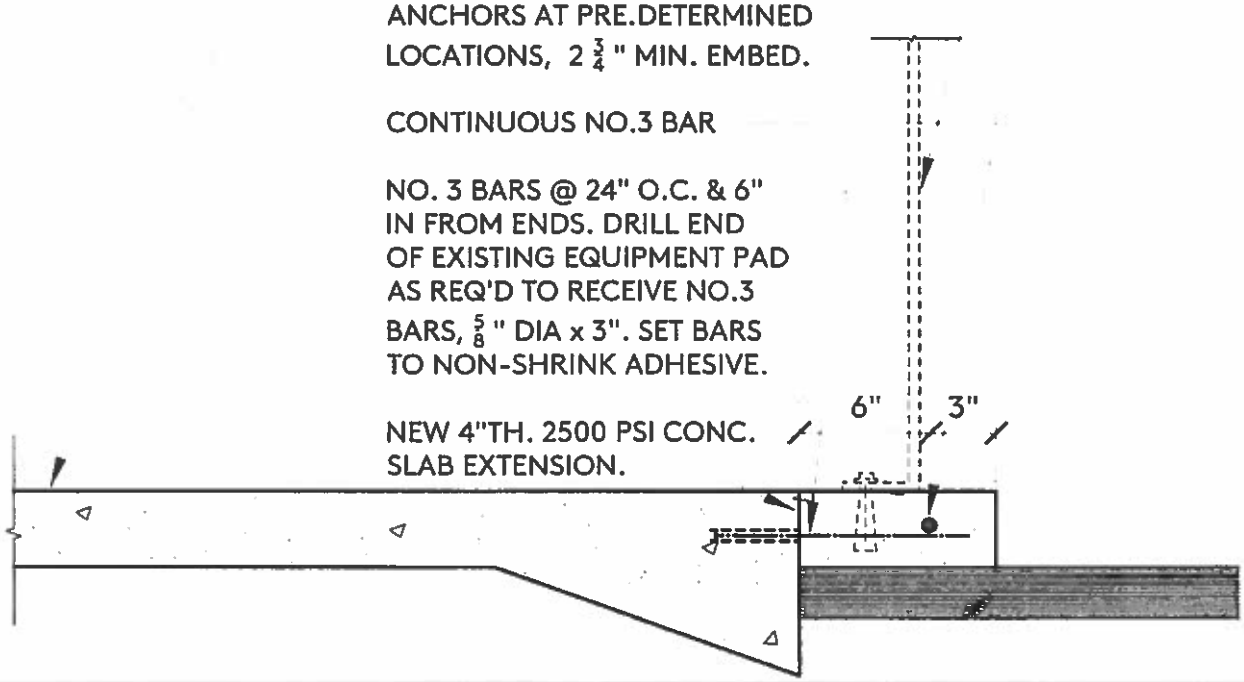

EXISTING A.C PAVING. CUT & PATCH AS REQUIRED TO RECEIVE SLAB EXTENSION (IF REQUIRED)

pjhm architects

San Diego:
824 Pier View Way #103
Oceanside, CA 92054
p 760 730 5527 f 760 730 5627

Orange County:
24481 Ridge Route Road #100
Laguna Hills, CA 92653
p 949 498 6191 f 949 498 0269

JEFFERSON SCHOOL REPLACEMENT
INCREMENT 2 EQUIPMENT SHELTER
PHASE II
JEFFERSON SCHOOL DISTRICT

All	DATE	SCALE
	06/21/16	1'1/2 " = 1'

DESCRIPTION: SECTION OF CONC. DETAIL

SHEET: CONCRETE DETAIL